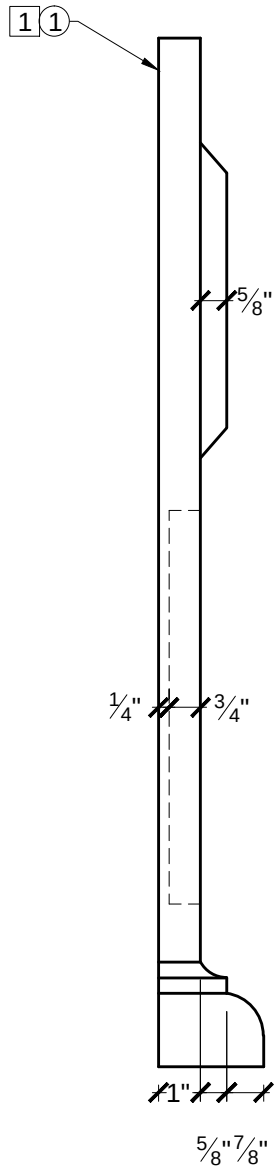

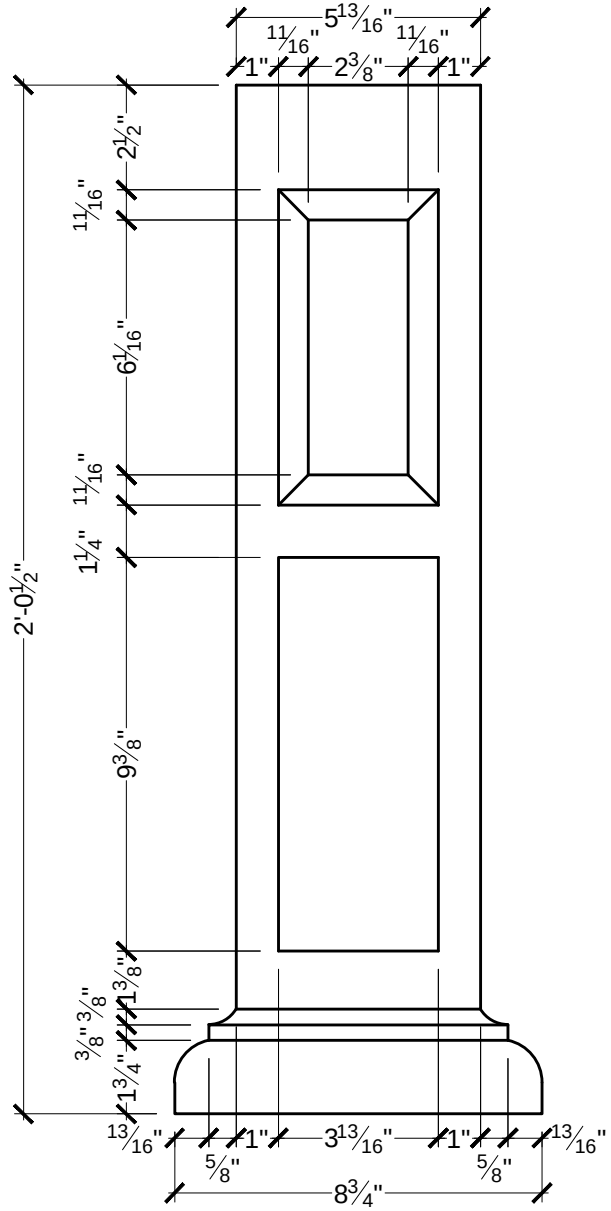

BILL OF MATERIAL

1 BL3109 - BLOCK MADE OF POLYURETHANE AND/OR PVC

OPERATIONS

1 MOULDED IN SEVERAL PIECES, ASSEMBLED AND PATCHED IN FACTORY

GENERAL NOTES:

-ALL CUSTOM MANUFACTURED AND/OR MODIFIED STANDARD PRODUCTS ARE NON-RETURNABLE

-SPECTIS ADHESIVE MUST BE USED ON ALL BEDDING/BUTT JOINTS

Confirm For Correctness
& Fax Back Within 24 Hrs.
To (204) 388-6710
*Your Signature:*_____

© SPECTIS MOULDERS INC.

P.O. BOX 970
100 CEDAR DRIVE
NIVERVILLE, MANITOBA
CANADA R0A 1E0

PHONE: 204-388-6700
PHONE: 800-685-9981
FAX: 204-388-6710

BOX 479
PEMBINA,
NORTH DAKOTA
58271-0479
U.S.A

GENERAL NOTES:
1. ALL PRODUCTS ARE DRAWN FOR PRESENTATION PURPOSE, ONLY IMAGE MAY VARY SLIGHTLY FROM ACTUAL PART
2. DRAWING INTENT IS TO INDICATE GENERAL ARRANGEMENT, DESIGN AND INTENT OF WORK IS PARTLY DIAGRAMMATIC.
3. SPECTIS RESERVES THE RIGHT TO CHANGE ANY PRODUCT DESIGN WITHOUT NOTICE.

É 2006, Spectis Moulders Inc. All rights reserved. This document may not be used or duplicate without prior consent.

CUSTOMER NAME: STANDARD PRODUCT			PART: BL3109
REFERENCE: BLOCK			SHEET: XX OF XX
DRAWN BY: JK	DATE: 01/03/11	SCALE: 7/32 = 1"	REV: