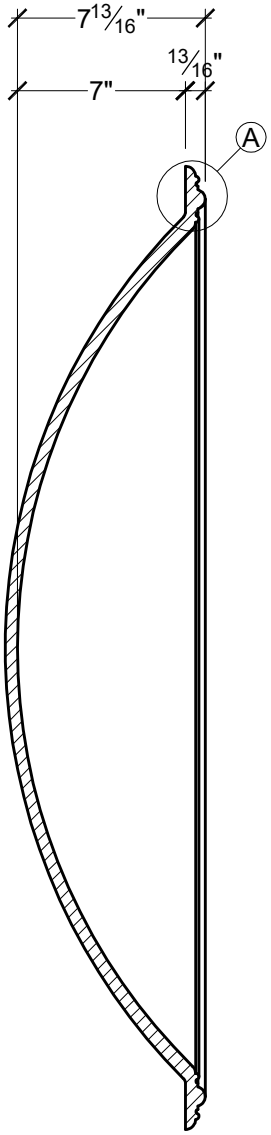

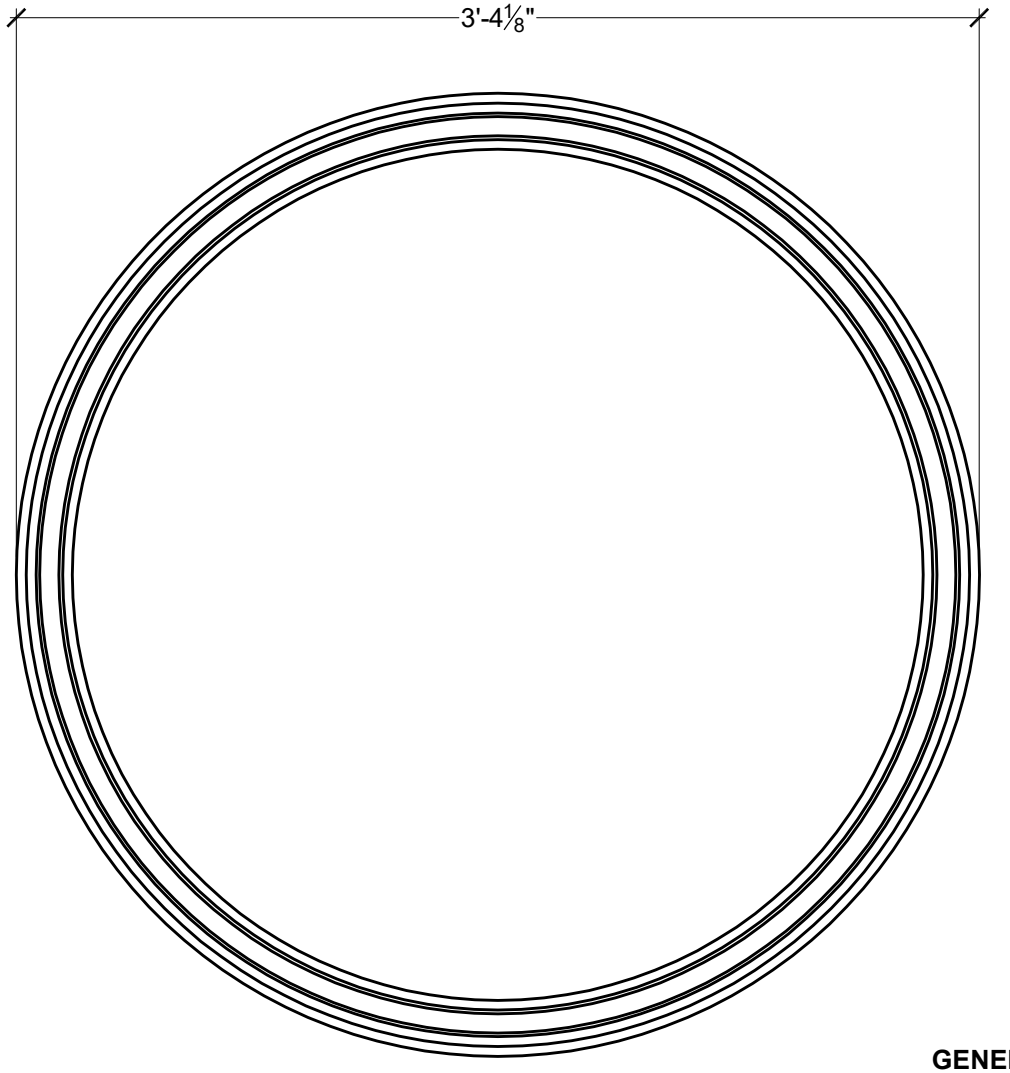

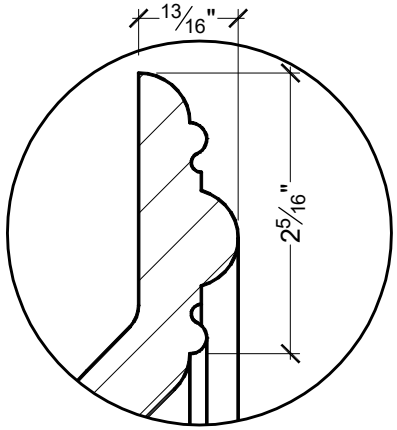

A MOULDING PROFILE
SCALE: 5/8 = 1"

GENERAL NOTES:
-SPECTIS ADHESIVE MUST BE USED ON ALL BEDDING/BUTT JOINTS

© **SPECTIS MOULDERS INC.**

P.O. BOX 970
100 CEDAR DRIVE
NIVERVILLE, MANITOBA
CANADA R0A 1E0

PHONE: 204-388-6700
PHONE: 800-685-9981
FAX: 204-388-6710

BOX 479
PEMBINA,
NORTH DAKOTA
58271-0479
U.S.A

GENERAL NOTES:
1. ALL PRODUCTS ARE DRAWN FOR PRESENTATION PURPOSSES, ONLY IMAGE MAY VARY SLIGHTLY FROM ACTURAL PART
2. DRAWING INTENT IS TO INDICATE GENERAL ARRANGEMENT, DESIGN AND INTENT OF WORK IS PARTLY DIAGRAMATIC.
3. SPECTIS RESERVES THE RIGHT TO CHANGE ANY PRODUCT DESIGN WITHOUT

© 2006, Spectis Moulders Inc. All rights reserved. This document may not be

CUSTOMER NAME:			PART:
STANDARD PRODUCT			DM1000
REFERENCE:			SHEET: 01 OF 01
DRAWN BY: JB	DATE: 06/11/06	SCALE: 1/8 = 1"	REV: